Ladder handles

PROTEKT®

Made in Poland

	DS 810	DS 811	DS 812
Material:	stainless steel	stainless steel	stainless steel
Weight:	2,64 kg	2,18 kg	3,32 kg

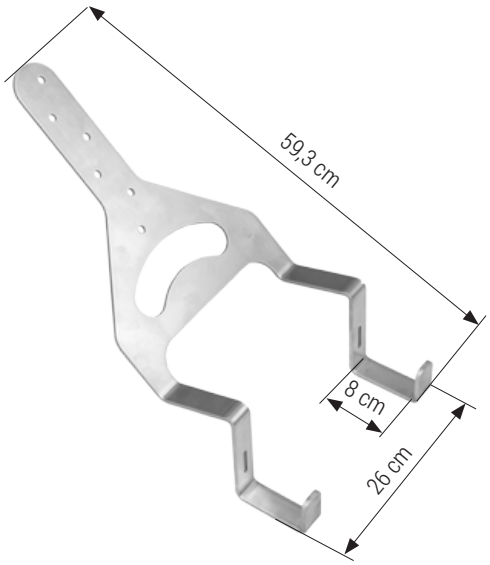

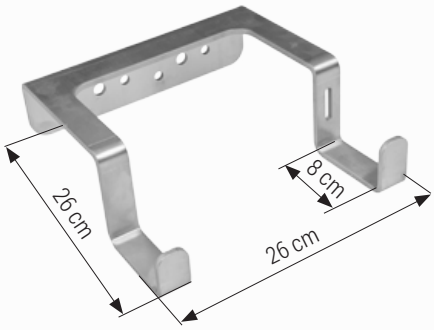

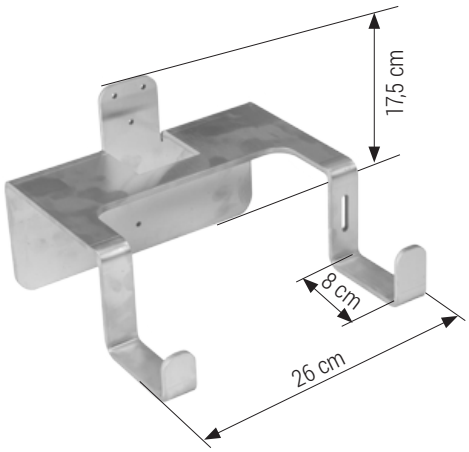

DS 810 / DS 811 / DS 812 handles are devices used to protect the set ladder against falling off the building facade. Additionally equipped with an safety strap for assembly, they ensure safe and stable work during ladder use.

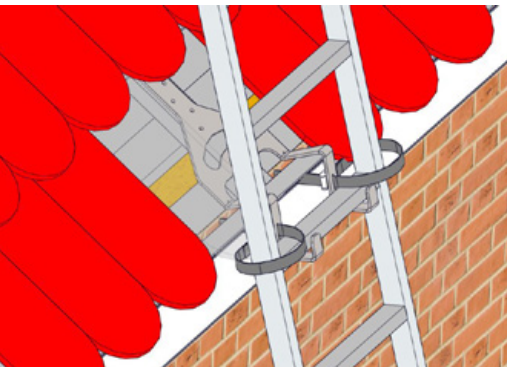

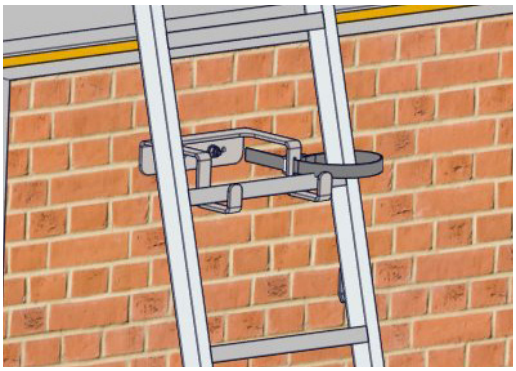

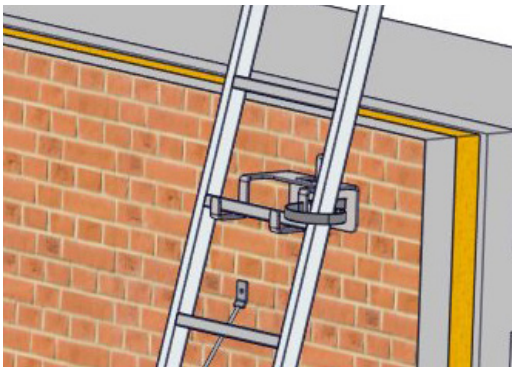

DS 810-001

LADDER SAFETY STRAP

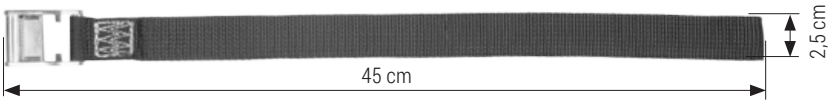

PROTEKT®
WWW.PROTEKT.UK

OFFICE - Skromna 6, 93-405 Lodz, POLAND / **CORRESPONDENCE ADDRESS** - PROTEKT, Starorudzka 9, 93-403 Lodz, POLAND
SALES DEPARTMENT Phone +48 42 29-29-500, export@protekt.com.pl, fax +48 42 680-20-93
WAREHOUSE - Gombrowicza 6, 93-405 Lodz, POLAND